Project Lead the Way

Are you the type of person who:

- ***Loves taking things apart to see how they work?***
- ***Tries to fix things that are broke?***
- ***Is amazed at how enormous structures are made?***
- ***Has a natural curiosity about technology you use your daily life?***
- ***Enjoys math and science class but wonders what you can do with that knowledge?***

Project Lead the Way

If you answered *YES!* to any of those questions then the

***PLTW program* at Southington High**

is for *YOU!*

PLTW teaches you about Engineering

Best in State:

2009, 2011, 2012, 2013, 2014, 2015, 2016, 2017

Engineers Are…***Problem Finders and Solvers***!

Project Lead the Way

- **Four-Year, Five-Course sequenced program**
- **Combines rigorous academics with “hands-on” learning**
- **Opportunity to learn and apply problem-solving skills**
- **Apply and showcase your math and science skills**
- **An opportunity to find out if engineering is a career interest <u>before</u> college**
- **Make great friends for the duration of high school and beyond**

PLTW Program Courses

- **(9) Introduction to Engineering Design and Development**
- **(10) Digital Electronics**
- **(11) Principles of Engineering**
- **(11) Computer Integrated Manufacturing**
- **(12) Engineering Design and Development**

INTRODUCTION TO ENGINEERING DESIGN

(9th Grade Course)

WHAT IS THIS???

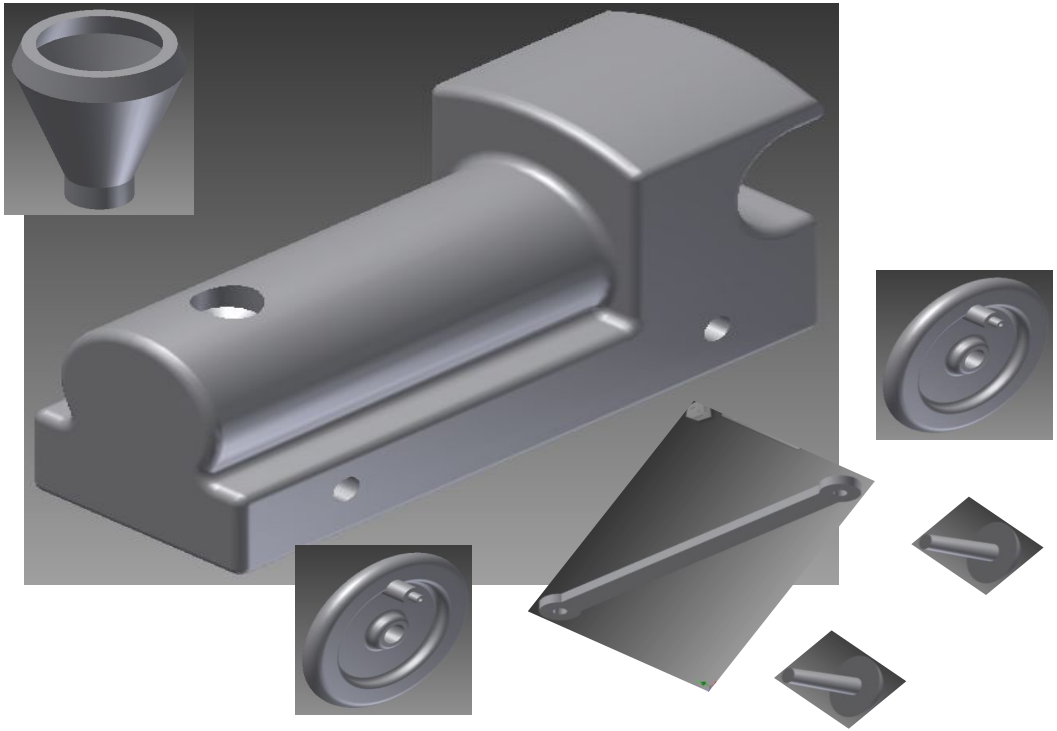

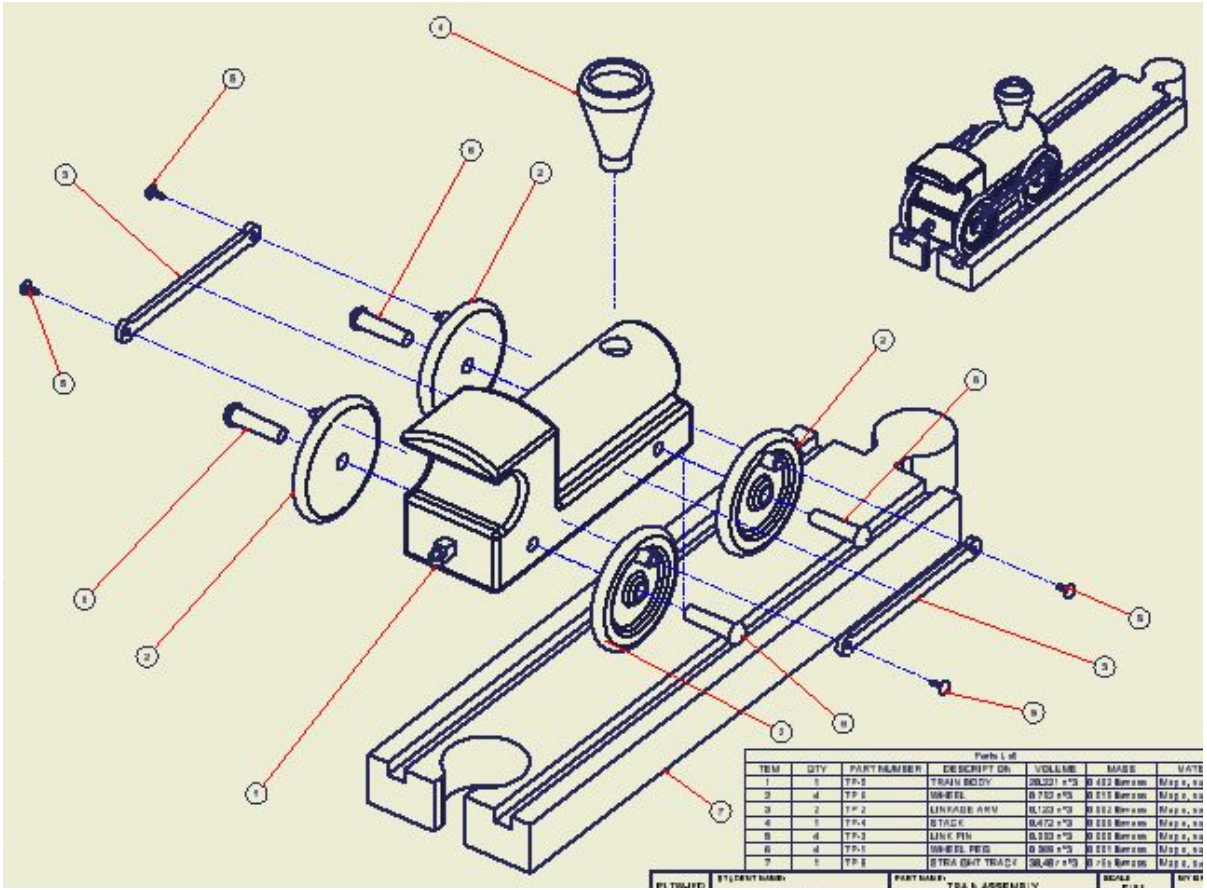
Parts List
ITEM
QTY
PART NUMBER
DESCRIPTION
VOLUME
MASS
TRAIN BODY
WHEEL
LINKAGE ARM
STACK
LINK PIN
WHEEL PEG
STRAIGHT TRACK
PART NAME:
SCALE

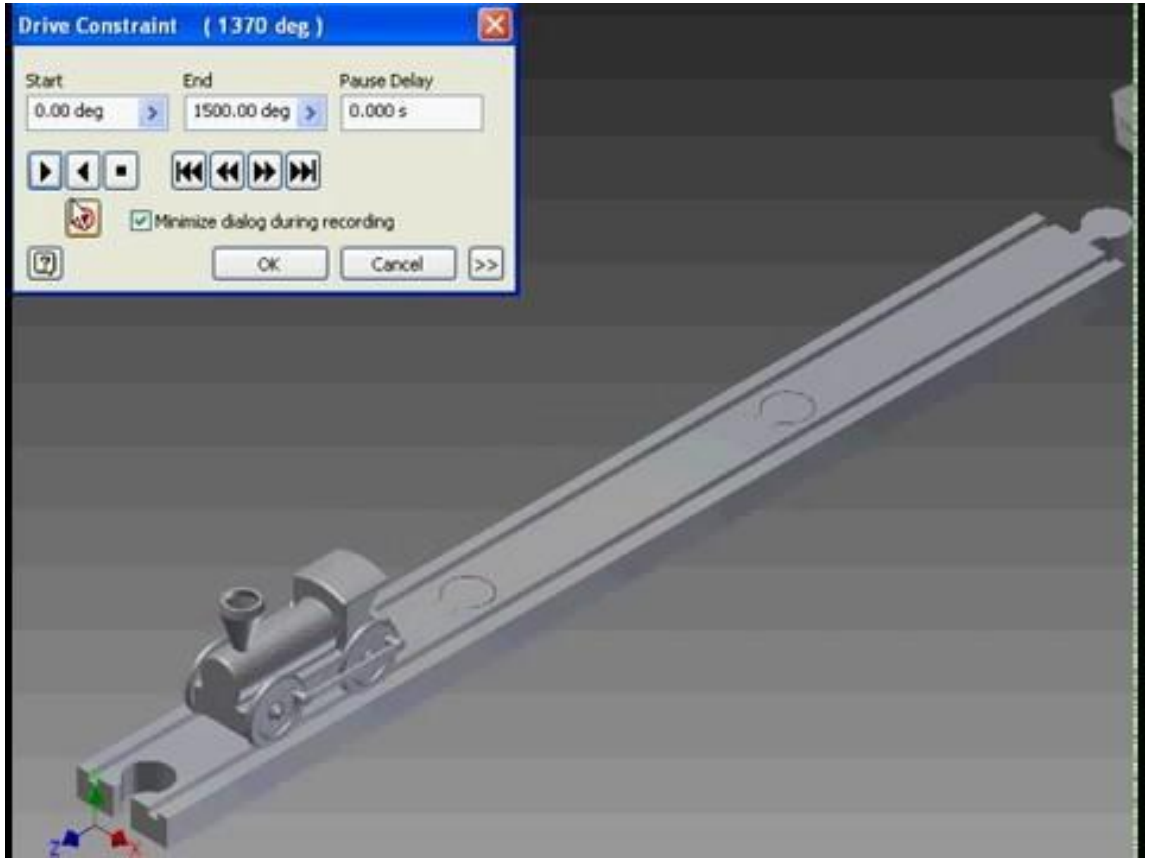
Drive Constraint (1370 deg)
Start
End
Pause Delay
0.00 deg
1500.00 deg
0.000 s
Minimize dialog during recording
OK
Cancel
>>
Z
X

Digital Electronics

(10th Grade Course)

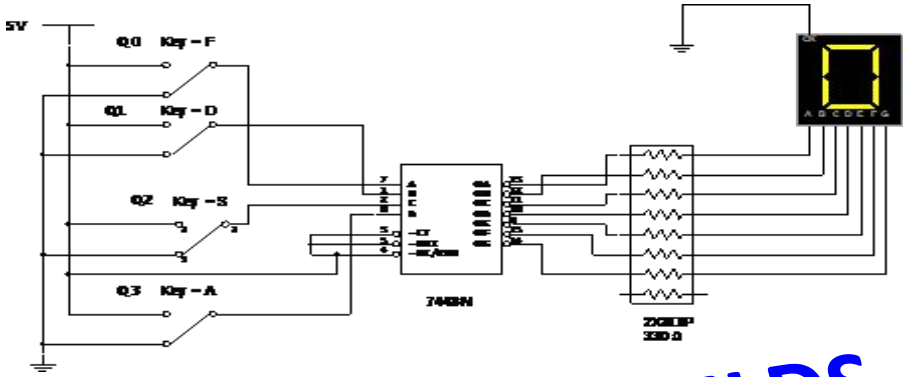

THIS SKETCH BUILDS THIS…

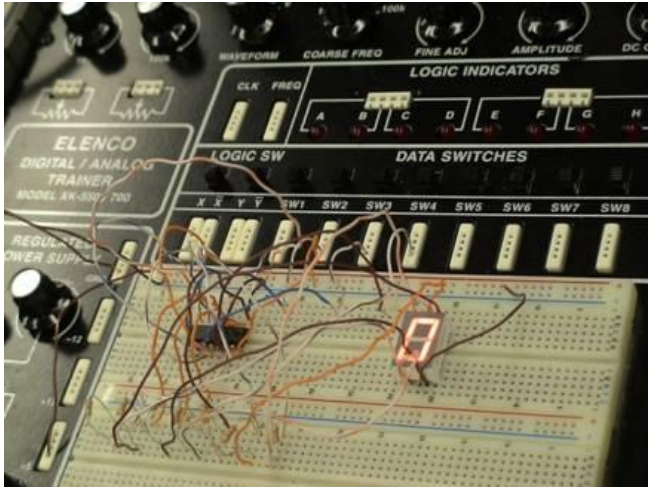

TURN IT

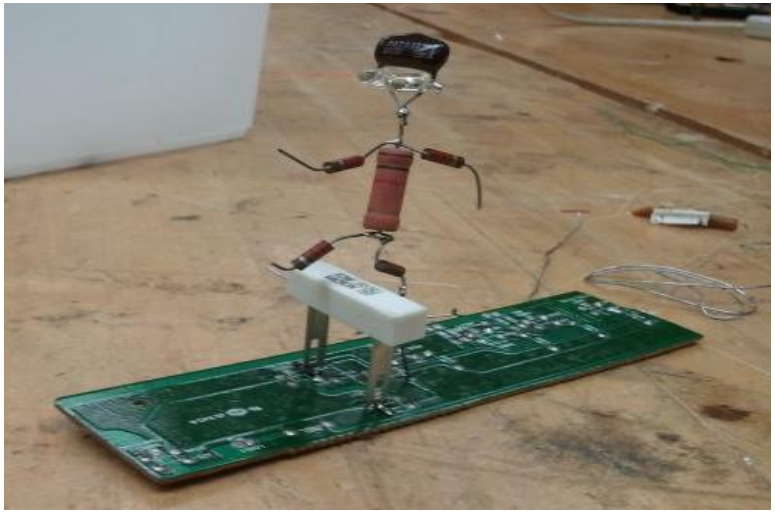

YOU MAKE THIS...

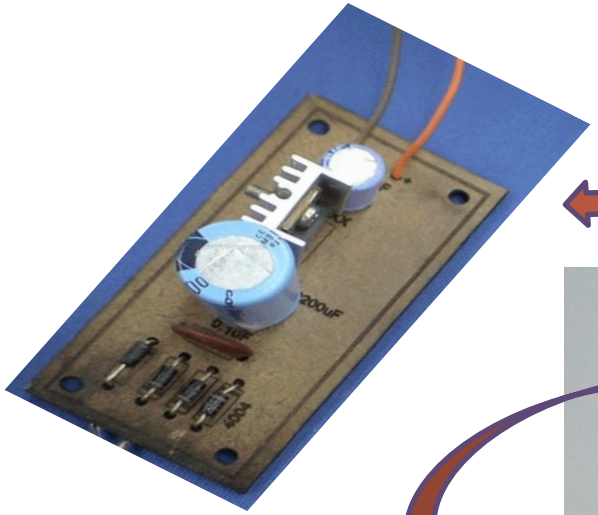

TO POWER THAT...

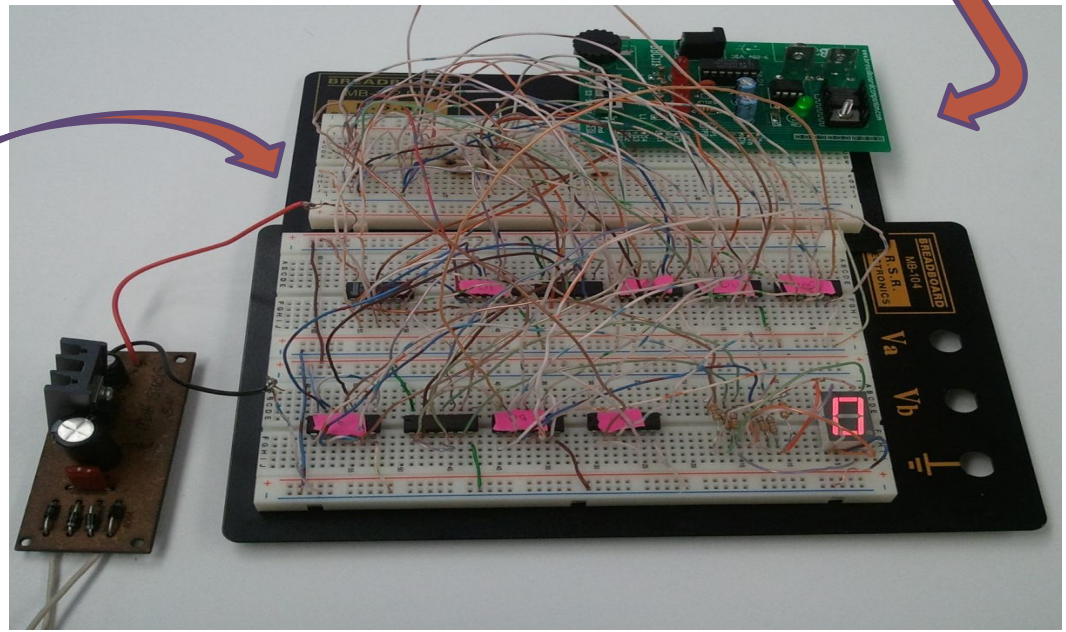

Principles of Engineering

(11th Grade Course)

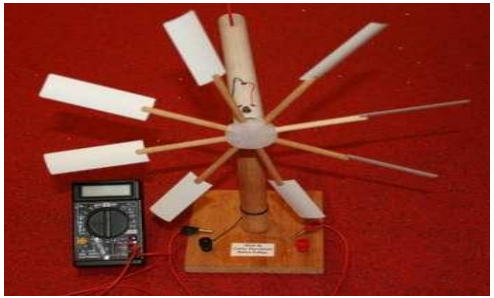

Energy

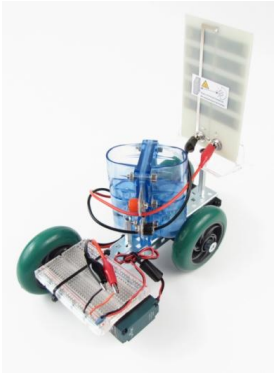

Careers

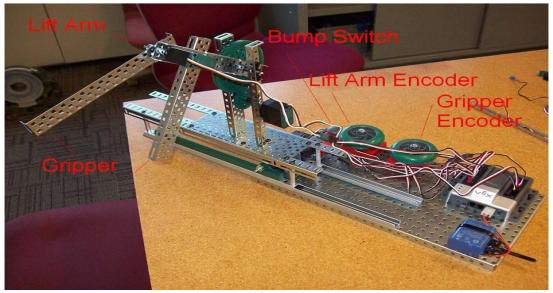

Controls

Materials

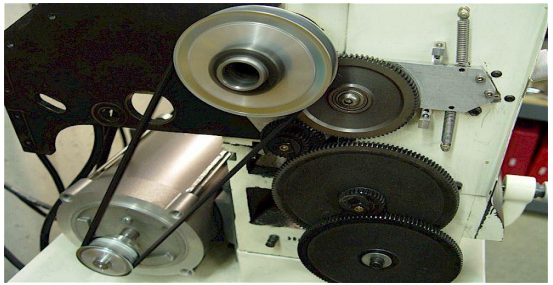

Mechanisms

Make Your Ideas Come to Life!

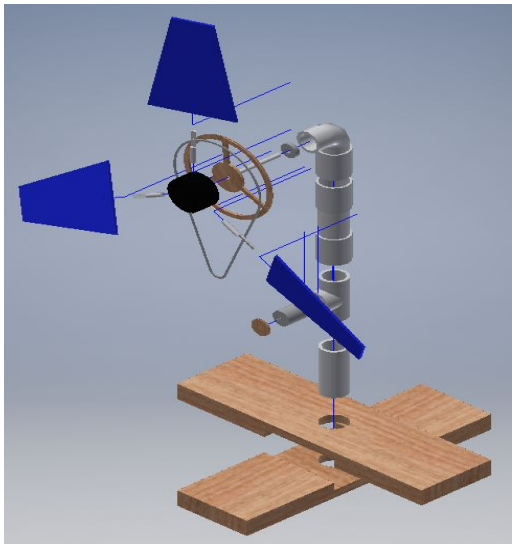

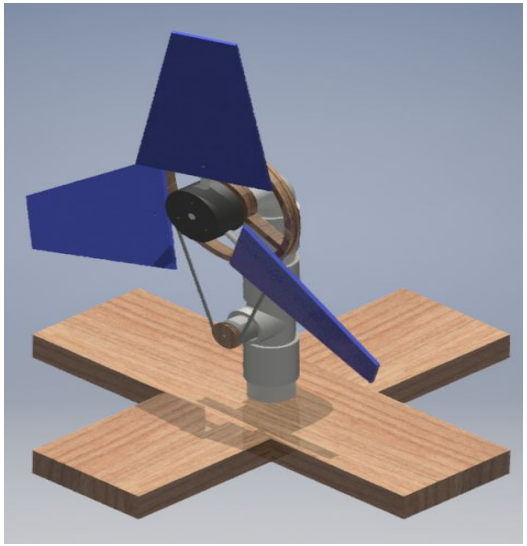

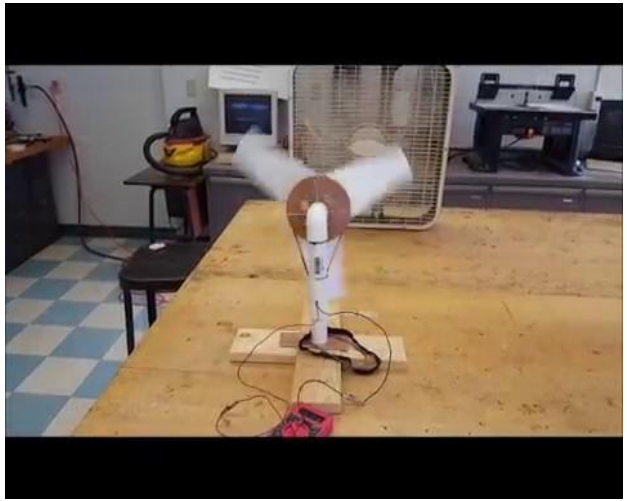

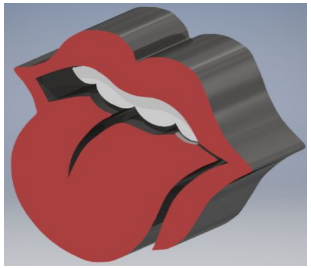

Computer Integrated Manufacturing

(11th Grade Course)

Computer Aided Design and Manufacturing

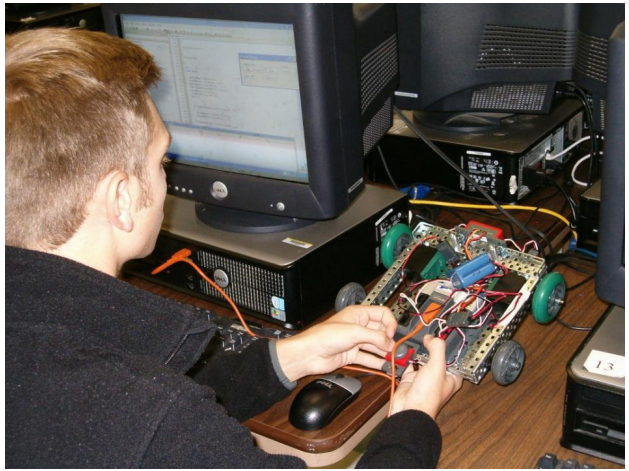

Robotics/Coding

Computer Numeric Control

Make Your Ideas Come to Life!

```
File: D:\Ben\Drive\School\PLTW\PLTW - POE_CIM 5_6\PLTW - CIM 6\Unit 1\1.3 AGV\1.3 AGV 10-13

#pragma config(Sensor, in1,    leftFollower,    sensorLineFollower)
#pragma config(Sensor, in2,    centerFollower,  sensorLineFollower)
#pragma config(Sensor, in3,    rightFollower,   sensorLineFollower)
#pragma config(Sensor, dgtl1,  bumpSwitch,      sensorTouch)
#pragma config(Sensor, dgtl2,  sonar,           sensorSONAR_inch)
#pragma config(Sensor, dgtl12, green,           sensorLEDtoVCC)
#pragma config(Motor,  port2,           leftMotor,     tmotorVex269_MC29, openloop)
#pragma config(Motor,  port3,           rightMotor,    tmotorVex269_MC29, openloop, reversed
//*!!Code automatically generated by 'ROBOTC' configuration wizard               !!*//

/*

Project Title: 1.3 AGV
Team Members: Ben Wakefield, Sarah Myrick
Date Started: 10/6/16
Section: Unit 1.3

Task Description:

Pseudocode:

*/

task main()
{
  int threshold; //Variable establishment for line follower logic
  threshold = 2443; //Calculated average across all line followers
  int onLine; //Variable establishment for line follower program condition
  onLine = 2; //Unneeded until after tunnel and first halt

  untilBump(bumpSwitch, 100); //Start program after human interaction
  startMotor(rightMotor, 68); //Accelerate through tunnel
  startMotor(leftMotor, 127);

  untilSonarLessThan(16, sonar); //When simulated machine is 12 inches away
  stopMotor(rightMotor); //Stop
  stopMotor(leftMotor);
  wait(5); //For 5 seconds
  startMotor(rightMotor, -68); //Turn to the left towards line track
  startMotor(leftMotor, 127);
  wait(0.4); //For 0.4 second
  startMotor(rightMotor, 68); //Accelerate onto line track
  startMotor(leftMotor, 127);
  wait(0.8); //For 0.8 second
  onLine = 1; //Establish condition: On line track

  while(onLine == 1) //Robot on line track
  {
    if(SensorValue(leftFollower)>threshold) //Veering to the right
    {
      startMotor(rightMotor, 127); //Turn left
      startMotor(leftMotor, -34);
      untilDark(threshold, centerFollower); //Until back on center
    }
    if(SensorValue(rightFollower)>threshold) //Veering to the left
    {
      startMotor(rightMotor, -17); //Turn right
      startMotor(leftMotor, 127);
      untilDark(threshold, centerFollower); //Until back on center
    }
    if(SensorValue(centerFollower)>threshold) //On center
    {
      startMotor(rightMotor, 68); //Keep going straight
      startMotor(leftMotor, 127);
      if(SensorValue(leftFollower)>threshold)
      {
```

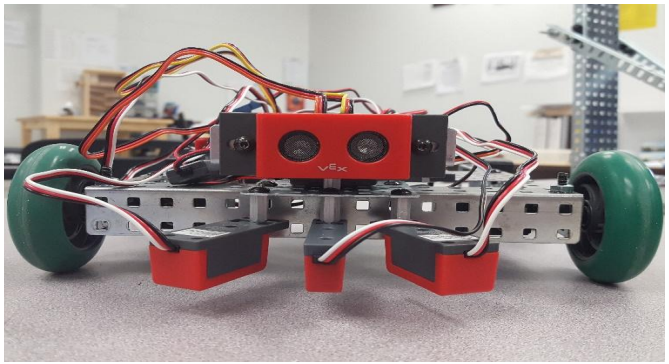

Make Your Ideas Come to Life!

Engineering Design and Development

(12th Grade Course - capstone)

Where Our Students Ended Up…

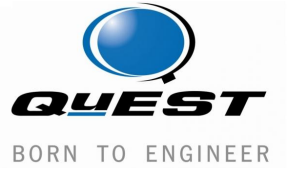

Additional Benefits of PLTW

Field Trips!!!

Colleges

- ✓ Uconn
- ✓ West Point
- ✓ Coast Guard Academy
- ✓ Western New England University
- ✓ University of New Haven
- ✓ University of Hartford

Industry

- ✓ Sikorsky Aircraft
- ✓ Pratt & Whitney
- ✓ Wittmann Robotics
- ✓ Pearl Harbor Bridge
- ✓ Trumpf
- ✓ EDAC Technologies
- ✓ Smiths-Medical

Additional Benefits Of PLTW

College and Career Preparation

- **Competitive for college admissions**
  - **SHS transcript**
- **College Credits from *Rochester Institute of Technology***
  - **Up to 12 credits (equivalent to starting college half-year ahead)**
- **Career opportunities right out of high school**

How PLTW Works At SHS

- Selective program (36 students total admitted)
- Obtain and complete the entire application from SHS website
- Submit to your school counselor
- PLTW team will review and select 36 students
- Parents of selected students will be contacted
- Enroll in PLTW Program

How to Apply

- **Talk to your parents**
- **Download a PLTW program application from the Southington High website**
- **COMPLETE THE APPLICATION AND RETURN IT TO YOUR GUIDANCE OFFICE BY THE DEADLINE!**

Frequently Asked Questions

- Are there any girls in the program?
- What if I apply and don't get accepted?
- What happens if I apply, get accepted, and change my mind?
- What if I do not enjoy the PLTW program after freshman year?